Sword Feeder

DEPRAG
machines unlimited

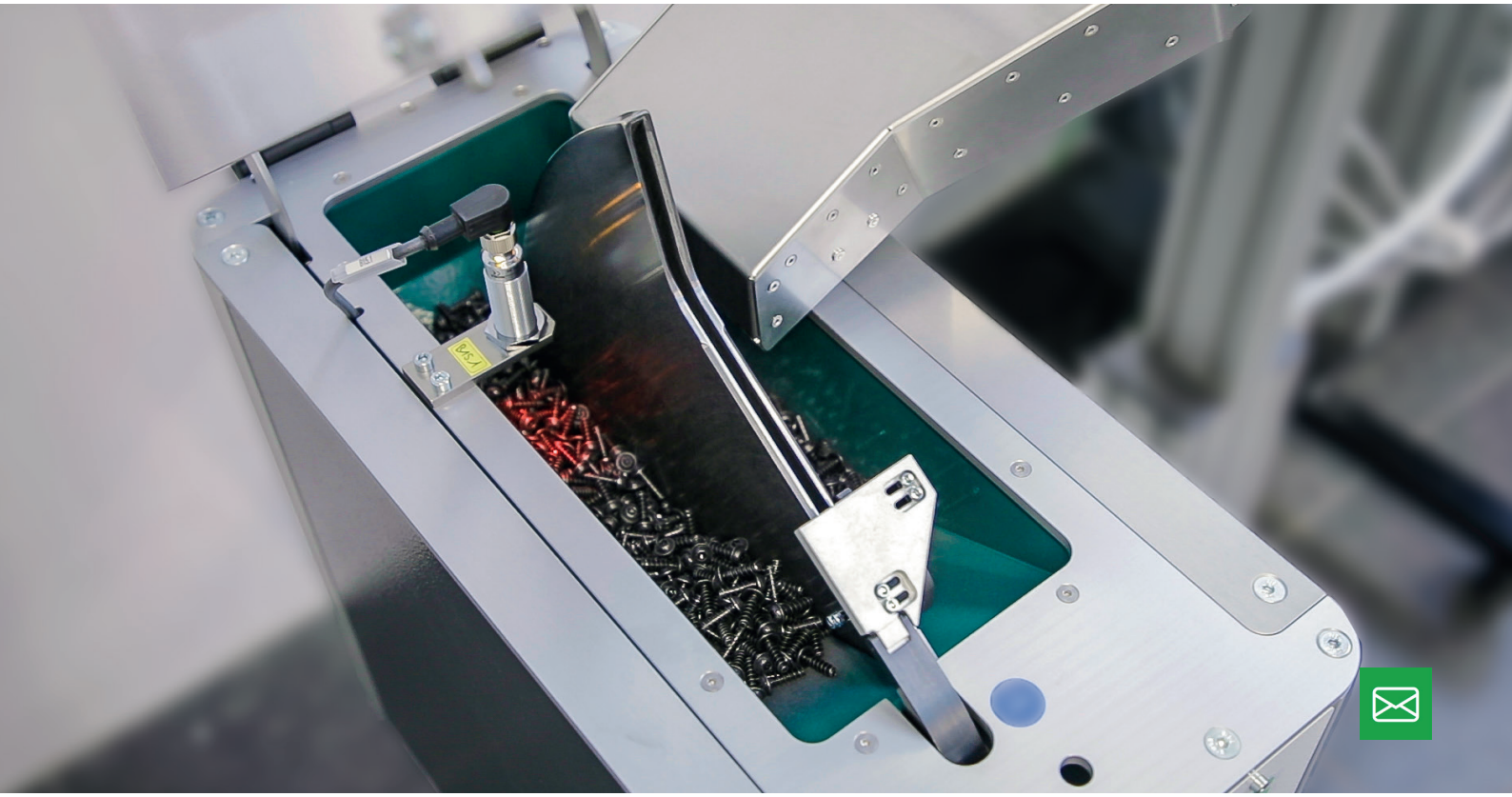

The sword feeder can be used in automated assembly systems as well as manual operations with handheld screwdrivers. Sword feeders are the alternative to vibratory bowl feeders when a very gentle, low-abrasion part feeding is required. In a sword feeder, screws are lifted from a lower position to an upper position through a kind of sword and fed into the separator in the correct position by gravity.

- **High application rate** for efficient production processes.
- **Robust and reliable**
- **Technical cleanliness -** reduction of abrasion due to low-vibration feeding method.
- **Low noise**

DEPRAG Feeding Technology

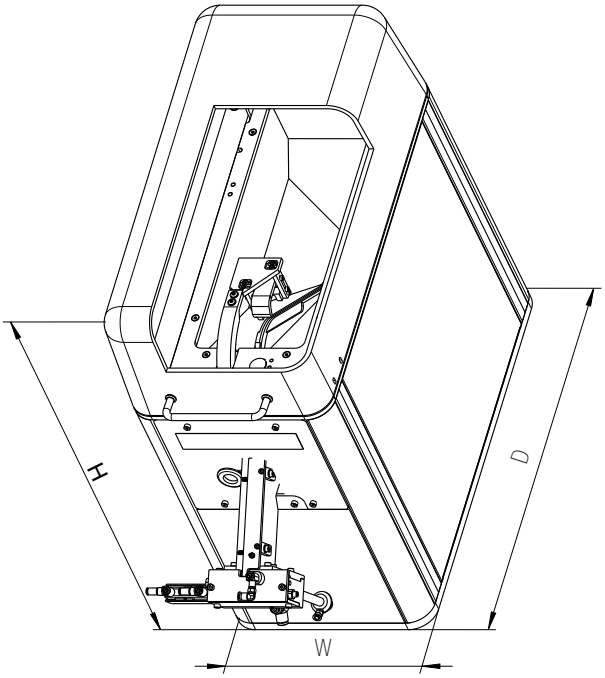

Technical data sword feeder - filling capacity 0.15 liters		
Material to be fed		screws
Filling capacity		0.15 liters
With PLC	Type	1811-0.15-x*)
Without PLC	Type	0811-O/0.15 0811-P/0.15
Control unit		PFC100 (insulation IP54)
Amount of connectable drivers		1
Theoretical feed rate max.	parts/min	30
Filling capacity	l/gal.	0.15 / 0.04
Max. head diameter	mm/in.	5 / 0.195
Max. shaft length	mm/in.	8 / 0.312
Range of shaft diameter	mm/in.	1.0 - 2.5 / 0.039 - 0.1
Air pressure requirement	bar/PSI	6.3 / 90
Air hose dia.	mm/in.	10 / 0.39
Weight approx.	kg/lbs	6 / 13.2
Dimensions (WxDxH) approx.	mm/in.	170 x 120 x 220 / 6.63 x 4.68 x 8.58

*) x = Voltage Supply (1: 230 V / 50 Hz, 2: 115 V / 60 Hz)

Technical data sword feeder - filling capacity 1.5 liters							
Material to be fed		screws					
Filling capacity		1.5 liters					
With PLC	Type	01811-EP/1.5 11811-1.5	–	–	–	–	–
Without PLC	Type	01811-O/1.5 01811-P/1.5	01811-2-O/1.5 01811-2-P/1.5 01811-2-O/1.5V 01811-2-P/1.5V	01811-3-O/1.5 01811-3-P/1.5 01811-3-O/1.5V 01811-3-P/1.5V	01811-4-O/1.5 01811-4-P/1.5 01811-4-O/1.5V 01811-4-P/1.5V	01811-5-O/1.5 01811-5-P/1.5 01811-5-O/1.5V 01811-5-P/1.5V	01811-6-O/1.5 01811-6-P/1.5 01811-6-O/1.5V 01811-6-P/1.5V
Control unit		PFC18L controller (insulation IP30)					
Amount of connectable drivers		1	2	3	4	5	6
Theoretical feed rate max.	parts/min	30	2 x 15	3 x 10	4 x 8	5 x 6	6 x 5
Filling capacity	l/gal.	1.5 / 0.4					
Max. head diameter	mm/in.	12 / 0.468					
Max. shaft length	mm/in.	25 / 0.975					
Range of shaft diameter	mm/in.	2 - 6.3 / 0.08 - 0.25					
Voltage	V	24 Volt DC					
Max. power consumption	VA	50					
Air pressure requirement	bar/PSI	6 / 85.2					
Air hose dia.	mm/in.	10 / 0.39					
Weight approx.	kg/lbs	35/77	38/84	40/88	40/88	42/92	42/92
Dimensions (WxDxH) approx.	mm/in.	408 x 666 x 1223 / 15.9 x 25.97 x 47.7					

DEPRAG SCHULZ GMBH u. CO. KG · P.O. Box 1352, D-92203 Amberg · Carl-Schulz-Platz 1, D-92224 Amberg
Phone +49 9621 371-0 · Fax +49 9621 371-120 · www.deprag.com · info@deprag.de

© DEPRAG. All rights and technical alterations reserved – Fri | D3830E 04.2025