DEPRAG

DEPRAG SCHULZ GMBH u. CO.
Postfach 1352, D-92203 Amberg
Kurfürstenring 12-18, D-92224 Amberg
Telefon (09621) 371-0
Fax (09621) 371-120
Internet: http://www.deprag.com
e-mail: info@DEPRAG.de

DEPRAG INC.
P.O. Box 1554 • Lewisville, Texas 75067 – 1554
645 Hembry Street • Lewisville, Texas 75057 – 4726
Phone (972) 221 – 8731 • FAX (972) 221 – 8163
TOLL FREE (800) 4 DEPRAG
Internet: http://www.deprag.com
e-mail: deprag@depragusa.com

QUALITÄT VERBINDET
Zertifiziert nach DIN EN ISO 9001

QUALITY UNITES
CERTIFIED AS PER DIN EN ISO 9001

Feb-01 Technical alterations reserved

DEPRAG

Operating instructions

Pneumatic screwdriver

346F-218U	**372604 A**
346F-318U	**372604 B**
346F-518U	**372604 C**

MINIMAT-F-ULTRA

011190 E

Dear Customer:

Congratulations, you chose the enclosed tool from an extensive DEPRAG product line . This tool is the result of more than 60 years experience in the design and manufacturing of pneumatic tools for the industrial market. We offer a complete program of pneumatic tools, such as Drills, Tappers, Grinders, Screwdrivers, Impact Wrenches, Metal Working Tools and Hammers.
Please don't hesitate to call on us for all of your needs, from individual hand tools to the complete automated screwdriving cell. Our products offer solutions to all requirements, which may be needed in the screwdriving sector.
We kindly ask, that you read these operating instructions carefully, so that you will be able to use this tool safely and for many years to come. If you need additional information, please contact your DEPRAG Representative or contact us direct at DEPRAG. We will be happy to answer any questions.
We hope you will be pleased with your new tool!

Content: **Page**

1. Operating Instruction	2
1.1 Connection + Installation	2
1.2 Operation	3
1.3 Range- and Exchange of Clutch Spring	4
1.4 Torque Adjustment	5
2. Parts Breakdown	7/8
3. Maintenance	6
3.1 General	6
3.2 Testing and Maintenance	6
4. Trouble Shooting	9
5. Safety Tips	10
6. EC-Conformity Declaration	11
7. All important data at a glance	12

Before starting operation of tool make sure to carefully read and follow operating instruction.

General Information
All DEPRAG MINIMAT-F-ULTRA screwdrivers can be used with or without lubrication. (Please refer to 3.2 Testing and Maintenance)

1. Operating Instruction

1.1 Connection and Installation

- Blow out air hose before connecting it to the tool.
- connect the MINIMAT-F-ULTRA Screwdriver connects to the Controller as follows
  a) Pressure Hose for Driver air. The minimum I.D. needs to be 6 mm (1/4“). Please make sure, that the hose is of the right size and not longer than 2 meters (6,6 ft.)
  b) Function Hose for start impulse (hose I.D. 2,6 mm).
- Unless otherwise requested the driver is preset to max. torque with the strongest clutch spring.
- The air pressure should be 90 PSI (6,3) bar. A pressure below 90 PSI reduces tool performance, a pressure above 90 PSI increases wear and tear on the tool.

We recommend in accordance with the ISO 8573-1 the quality of compressed air:

	Class	Test oil level mg/m³	Test dust µ	Test dust mg/m³	Test water DTP	Test water g/m³
Oiled air	4	5	15	8	+3	6
Oilfree air	3	1	5	5	-20	0,88

Attention:
Make sure the hoses allow unrestricted air flow; avoid bends, nicks, etc.

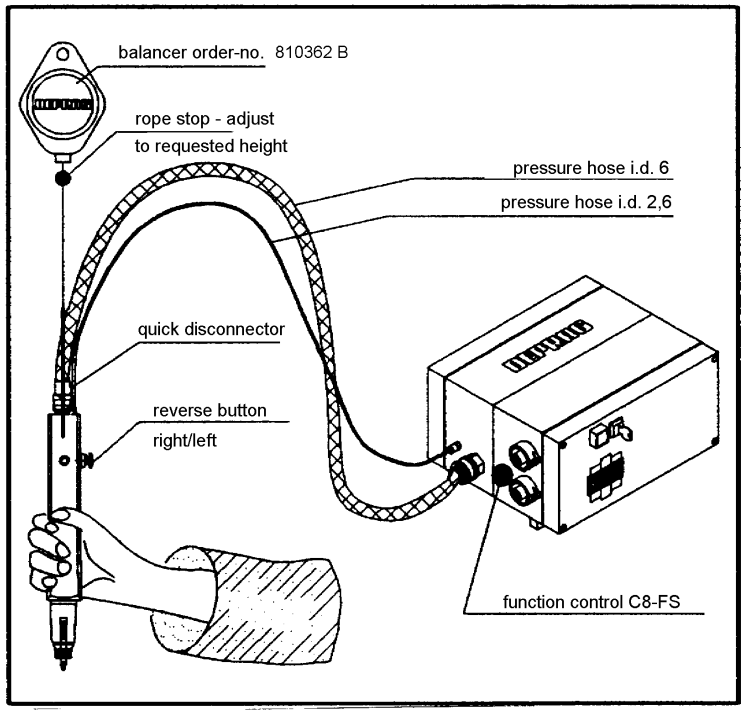

Picture 1: Connection of a DEPRAG MINIMAT-F-ULTRA Screwdriver

Operation with Finder and Magnetic Bits:
To mount the finder (optional equipment)

- unscrew the screw cap (left hand thread)
- slide the spring sleeve into the screw cap, place spring into finder and then re-assemble the screw cap.

1.2 Operation

The MINIMAT-F-ULTRA Screwdriver will only operate correctly if connected to the Minimat-F-Controller C8-FS. Grip the driver as shown on picture 1. As soon as you push the bit onto a screw, a start impulse is given to the function control to supply air to the driver, the driver starts automatically and assembles the screw. Watch turn-direction (picture 2)! When the preset torque is reached, the clutch disengages and the driver stops. When you lift the tool, it is ready to start again. When loosening screws, push the reverse button before you start the driver. The reverse button can be locked by a slight rotation in either direction. With this the driver will continuously run in left rotation.

7. All important data at a glance

Technical Data:

Manufacturer: DEPRAG-SCHULZ GMBH & CO
Address: PO Box 1352
D-92203 Amberg
Phone: 09621/371-0
Fax: 09621/371-120
Subsidiary: DEPRAG INC.
Address: 645 Hembry Street
Lewisville, TX 75057
Phone: (800) 4 DEPRAG = (800) 433-7724
Fax: (214) 221-8163

Series: DEPRAG MINIMAT-F-ULTRA Screwdriver

Model:	**346F-218U**	**346F-318U**	**346F-518U**
Order No.	**372604 A**	**372604 B**	**372604 C**
Length (inches) (mm):	8.2 208		
Diameter of motor housing (inches) (mm)	1.1 28		
Drive (mm):	F 6,3 (1/4")		
Weight (kg):	0,4		
Air Pressure Requirement (bar):	6,3		
Hose I.D. Requirement (mm):	min. LW 6 1/4"		
Torque Capacity (in.lbs.):	0,3	0,3	0,2
max. soft pull up	1,0	1,4	2,0
max. hard pull up	1,0	1,4	2,0
Speed (min^{-1}):	1900	1300	900
Noise Level (dB(A)):	62		
Vibration (m/s^2)	< 2.5		
air consumption (m^3/min)	0,23		

6. EC-Conformity Declaration

EC-Conformity Declaration according to the EC-Machine-Guidelines 98/37/EWG, Amendment IIA

We,

DEPRAG SCHULZ GMBH & CO.
PO Box 1352
D-92203 Amberg

hereby confirm, that the Screwdriver

DEPRAG-MINIMAT-F-ULTRA 346F-218U
346F-318U
346F-518U

conform to the following, relevant regulation:
- EC-Machine-Guidelines, Version 98/37/EWG, Amendment No. 1 and No. 2.2.

Applicable Standard:
- EN 292

Amberg,.13.12. 2002

Dipl. Ing. (FH) A. Lanig
Mr. Design Dpt.

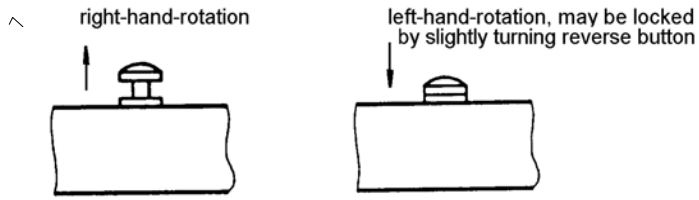

Picture 2: Reverse of Screwdriver

The driver is equipped with a quick change chuck. After the sleeve 351890 has been pulled toward the tip of the driver (see picture 4), the bit (6,3 mm = 1/4" hex drive) can be removed or inserted.
Before change of bits, disconnect the air. Otherwise the driver may start and possibly cause an injury. Please use only high quality 1/4" hex bits.

Please note that an injury is possible:
- If the driver reacts with an unexpected motion or is damaged.
- When the bit is pushed, the screwdriver starts automatically.

1.3 Range- and Exchange of Clutch Spring

The torque range of the DEPRAG MINIMAT-F-ULTRA Screwdriver is adjustable. Please see a listing for the torque ranges of the color coded springs below.

Torque Range of individual clutch springs (appx.)

Part	Wire∅	Color	Torque minimum	Torque maximum
323035/1	2,8	green	1,4 Nm = 12,3 in.lbs.	2,4 Nm = 21,1 in.lbs.
323036	2,2	red	0,5 Nm = 4,4 in.lbs.	1,5 Nm = 13,2 in.lbs.
323037	1,6	yellow	0,2 Nm = 1,8 in.lbs.	0,6 Nm = 5,28 in.lbs.

All torque values are based on 90 PSI (6,3 bar) air pressure.

Change of Clutch Spring (Picture 3)
Prior to change of clutch spring, disconnect driver from air supply.
1. Unscrew clutch bearing 372569 A. (left hand thread)
2. Take out clutch 356444 A complete.
3. Press torque setting screwdriver 326240 into the half-round bore of the lock ring 328705/1 and turn in clockwise direction, until the adjustment nut 328704 is unscrewed.
4. Pull off lock ring 328705/1.
5. Remove clutch spring, replace with new clutch spring and reassemble clutch in reverse order.

6. Push clutch into the clutch bearing and tighten clutch bearing to the motor housing of the screwdriver. (left hand thread)

Attention:
The claw of the clutch must engage with the claw of the spindle.

7. Adjustment of the clutch according to 1.4

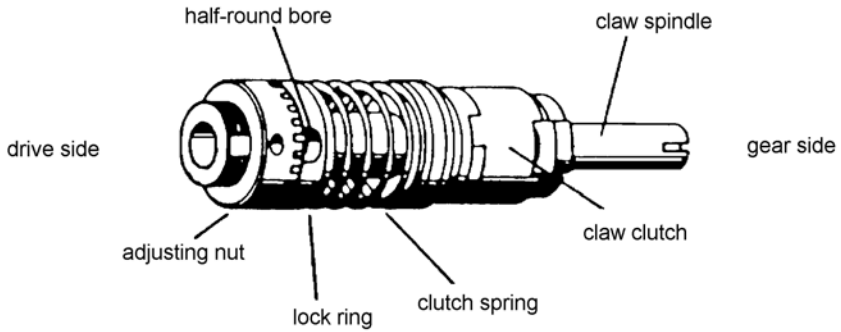

Picture 3: Change of Clutch Springs

1.4 Torque Adjustment

To avoid a driver lock-out by the Multi-Function controller, apply the following adjustment method:

- input required amount of screws per part on the digital counter to the value of 97.
- turn key-switch to the reset-position or keep pressing the reset-button.

While the driver is rotating, its function will be indicated as an error on the multi-function controller. For the torque-adjustment, disregard this error indication.
The driver is now ready for torque-adjustment:

1. Introduce screwdriver 326240 into the half-round bore of the lockring through the groove of the clutch bearing.
2. By turning the screwdriver in clockwise order the torque is reduced and vice versa increased.

Attention:
The claw of the clutch must engage with the claw of the spindle.

2. Spare Parts Listing

see Picture 4, Pages 7/8

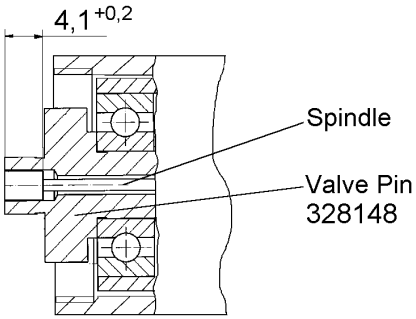

Picture 5: Actual size of Valve Pin (to be measured under air-pressure)

5. Safety Tips

The tool is not insulated to protect against an electrical power surge. It is not recommended to use this tool in explosive hazardous environments.

4. Trouble Shooting

Error:	Reason:	Solution:
Screwdriver does not	No air, Shut-Off valve is closed	Open Shut-Off valve
	Clutch is not engaged No push-to-start stroke	Mount clutch correctly Refer to: Range- and exchange of clutch spring
Insufficient Power	Air pressure too low	Minimum air pressure should be 90 PI for maximum performance
	Restriction in air hose	Remove bends for other restrictions
	Valve Pin too short	Check required length of valve pin according to picture 5. If needed, exchange valve pin.
	Hose ID is too small	Use required hose ID
	Vanes are worn	Exchange vanes
Driver does not shut-off or ratchets	Air pressure is too low for required torque value	Maintain air pressure of 90 PI
	Valve Pin is too long	Check length of valve pin, either shorten or replace valve pin

3. Maintenance

3.1 General

Testing and maintenance can be provided by Operator; disassembly and re-assembly of the DEPARG MINIMAL-F-ULTRA Screwdriver should be done by experience maintenance personnel. Incorrect assembly or disassembly can lead to injury of an operator and damage of the tool.

We would like to advise, that

- during any maintenance or repair work, the tool must be disconnected from the air supply.
- during any maintenance or repair work, a clean working surface is recommended. Also, it is not recommended to either eat or smoke during repair or maintenance.

3.2 Testing + Maintenance

The tool requires little maintenance. If the following service rules are observed, the tool will have a long life expectancy and will remain in a safe condition.

- Check tool on a regular basis for external damage.
- Check your maintenance until on a regular basis, make sure that sufficient oil is in the lubricator (if lubrication is used) and that the adjustment is correct. We recommend for your lubricator DEPRAGOL, part 790081 A. Oiling: approx. 1 - 2 drops per 1 m³ air consumption.
- If tool are being used with lubrication, we recommend to have tools tested and cleaned every 12 months (single shift).
- If tools are being used without lubrication, we recommend to have tools tested and cleaned every 6 months (single shift).
- After cleaning, the gearing parts have to be greased prior to re-assembly, preferably with Grease, part 807293.
- After assembly fill 2 – 3 drops of DEPRAGOL into the air inlet nipple.
- Exchange broken or worn bits and parts immediately, for they can cause injury to the Operator.

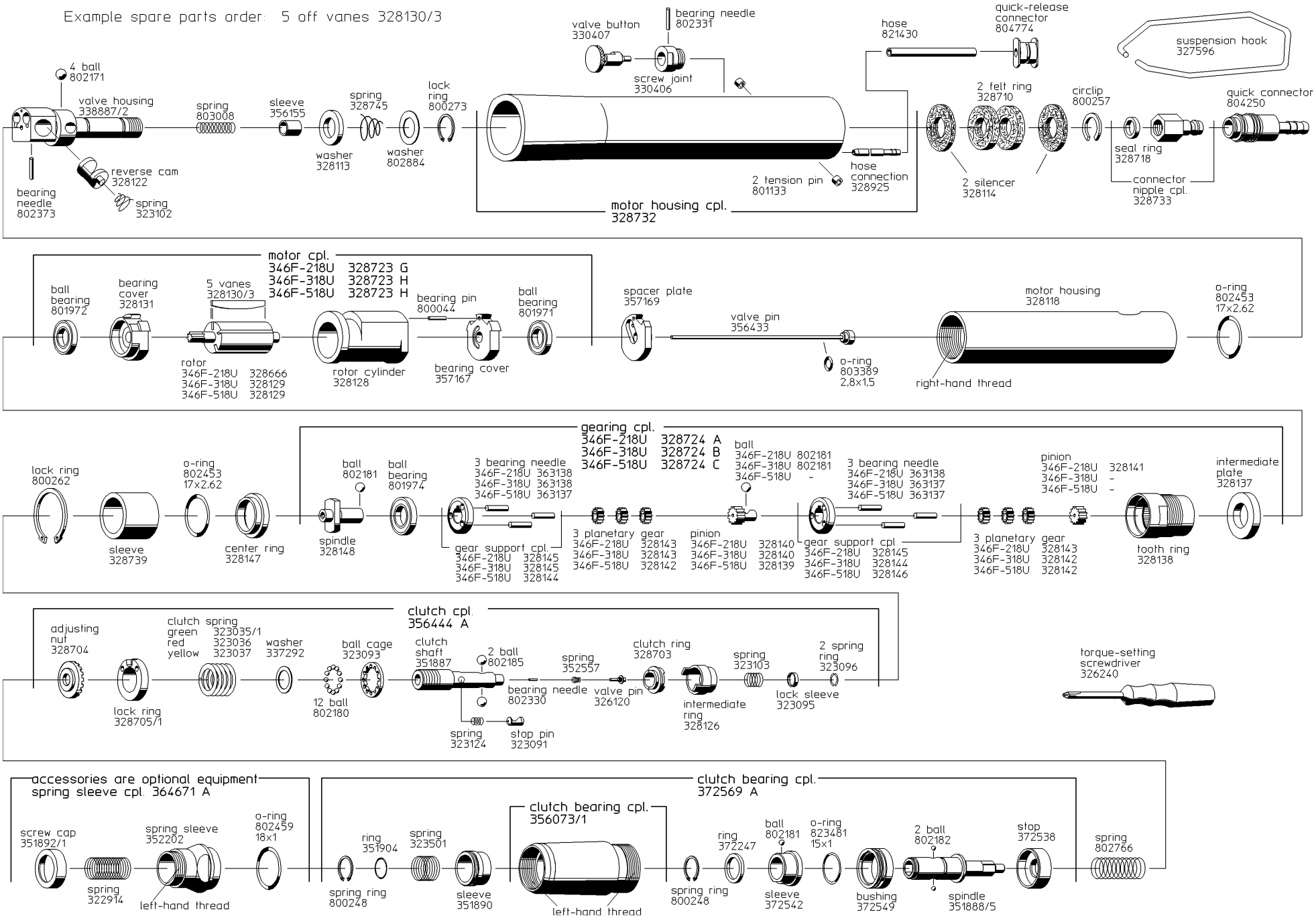

Picture 4: Parts Breakdown