DEPRAG SCHULZ GMBH u. CO.
Postfach 1352, D-92203 Amberg
Kurfürstenring 12-18, D-92224 Amberg
Telefon (09621) 371-0
Fax (09621) 371-120
Internet: http://www.deprag.com
e-mail: info@deprag.de

DEPRAG INC.
P.O. Box 1554 • Lewisville, Texas 75067 – 1554
645 Hembry Street • Lewisville, Texas 75057 – 4726
Phone (972) 221 – 8731 • FAX (972) 221 – 8163
TOLL FREE (800) 4 DEPRAG
Internet: http://www.deprag.com
e-mail: deprag@depragusa.com

CERTIFIED AS PER DIN EN ISO 9001

Jul-05 Technical alterations reserved

012155 EN

Operating instructions

Pneumatic screwdriver

325-3258UL	**362714 A**
325-4258UL	**362714 B**

Congratulations,

you chose the enclosed screwdriver from an extensive DEPRAG product line. This tool is the result of more than 60 years experience in the design and manufacturing of pneumatic tools for the industrial market. We offer a complete program of pneumatic tools, such as Drills, Tappers, Grinders, Screwdrivers, Impact Wrenches, Metal Working Tools and Hammers.
Please don't hesitate to call on us for all of your needs, from individual hand tools to the complete automatic screwdriving cell. Our products offer solutions to all requirements, which may be needed in the assembly sector.
We kindly ask, that you read these operating instructions carefully, so that you will be able to use this tool safely and for many years to come. If you need additional information, please contact your DEPRAG Representative or contact DEPRAG direct. We will be happy to answer all questions.
We hope you will be pleased with your new tool!

Content: **Page**

1. Operating Instruction	2
1.1 Connection + Installation	2
1.2 Operation	3
1.4 Range- and Exchange of Clutch Spring	4
1.5 Torque Adjustment	5
2. Spare Parts Listing	7/8
3. Maintenance	6
3.1 General	6
3.2 Testing and Maintenance	6
4. Trouble Shooting	9
5. Safety Tips	10
6. EC-Conformity Declaration	11
7. All important data at a glance	12

Before starting operation of tool make sure to carefully read and follow operating instruction.

General Information

All DEPRAG MINIMAT-ULTRA screwdrivers can be used with or without lubrication. (Please refer to 3.2 Testing and Maintenance) Oilfree operation could result in a loss of performance of up to 20 %.

1. Operating Instruction

1.1 Connection and Installation

- Blow out air hose before connecting it to the tool.
- connect the Screwdriver as follows

a) if used with lubrication, connect driver to Maintenance Unit, consisting of Filter, Lubricator and Regulator.

b) if used without lubrication, connect driver to Maintenance Unit, consisting of Filter and Regulator.

- The required I.D. of pressure hose is 6 mm (1/4”). Please make sure, that the pressure hose length does not exceed 2 meters (6,6 ft.)
- The air pressure should be (90 PSI) 6,3 bar. A pressure below 90 PSI reduces tool performance, a pressure above 90 PSI increases wear and tear on the tool.

Hinsichtlich der Druckluft-Qualität gem. ISO 8573-1 empfehlen wir:

	Klasse	Restölgehalt mg/m³	Reststaub		Restwasser	
			Partikel-größe µm	max. Konzen-tration mg/m³	Drucktau-punkt °C	max. Konzentration g/m³
Bei geölter Luft	4	5	15	8	+3	6
Bei ungeölter Luft	3	1	5	5	-20	0,88

Attention:

Make sure the hoses allow unrestricted air flow; avoid bends and other restrictions.

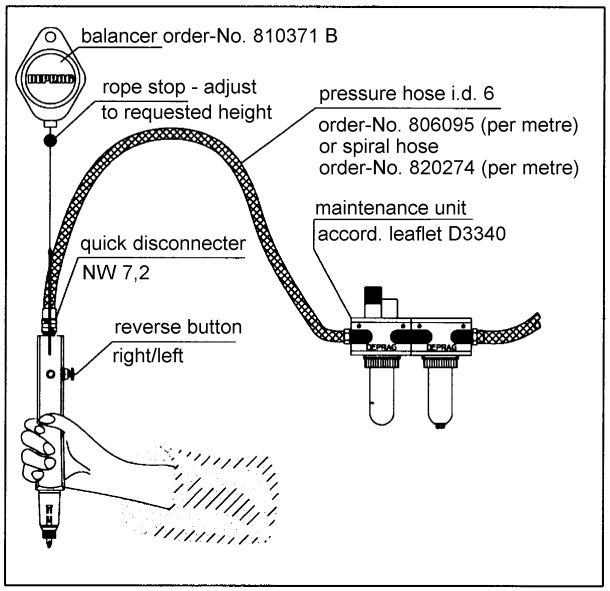

Picture 1: Connection of the Screwdriver

Screwdrivers, used with Finders and magnetic Bit:
Installation of Finder (Optional Equipment):

- Unscrew spring sleeve (left-hand thread)
- Slide finder into spring sleeve, insert pressure spring and fasten both items to the screwdriver.

1.2 Operation

The operation of the Screwdriver is very simple. Hold the driver as shown on picture 1. According to the required application, the driver can be used in Left- or right rotation. The turn direction can be actuated by pushing the reverse button (see picture 2). To change to left rotation, press the reverse button. This reverse button can be locked by turning it slightly in either direction, so that the driver can be used in reverse direction continuously.
As soon as you push the bit onto the screw, the driver starts in 2-steps. Step 1 will be activated by a slight down-pressure and allows an easy engagement of the bit into the screw drive. Step 2 is activated by a stronger down-pressure, which starts driving at the full motor power. To avoid an unexpected hight torque reaction (i.e. when loosening corroded screws), an integrated safety clutch can be adjusted to limit the torque reaction. This clutch will operate in either right- or left roation.

7. All important data at a glance

Technical Data:

Manufacturer: DEPRAG-SCHULZ GMBH & CO.
Address: Kurfürstenring 12 - 18 PO Box 1352
D-92224 Amberg D-92203 Amberg
Phone: 09621/371-0
Fax: 09621/371-120

Subsidiary: DEPRAG INC.
Address: 645 Hembry Street
Lewisville, TX 75057
Phone: (800) 4 DEPRAG = (800) 433-7724
Fax: (214) 221-8163

Type:	**325-3258UL**	**325-4258UL**
Part No.	362714 A	362714 B
length (mm)	262	
main body dia. (mm) / (in.)	36 / 1 7/16	
Hex drive female (mm) / (in.):	F 6,3 (1/4")	
weight (kg) / (lb.):	1 / 2.2	
required air pressure (bar) / (PSI):	6,3 / 90	
hose I.D. Requirement (mm) / (in.):	min. LW 6 1/4"	
Torque range (Nm)	1 - 10	1 - 10
Torque range (in.lbs.)	9 - 89	9 - 89
speed (min^{-1}) / (rpm):	650	280
noise level (dB(A)):	78	
Air Consumption (m^3/min)	0,35	
vibration (m/s^2)	< 2,5	

6. EC-Conformity Declaration

EC-Conformity Declaration according to the EC-Machine-Guidelines 98/37/EC, Amendment IIA

We,

DEPRAG SCHULZ GMBH & CO.
PO Box 1352
D-92203 Amberg

hereby confirm, that the
Screwdriver

325-3258UL
325-4258UL

conform to the following, relevant regulation:
- EC-Machine-Guidelines, Version 98/37/EC, Amendment No. 1 and No. 2.2.

Applicable Standard:
- EN 292

Amberg,. 15.07. 2005

Dipl. Ing. (FH) A. Lanig
Mr. Design Dpt.

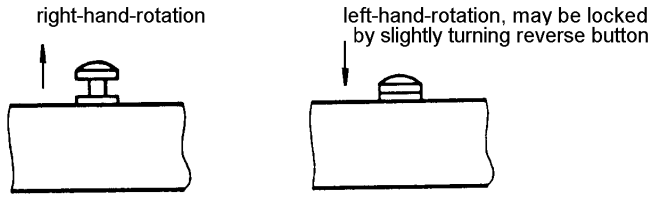

Picture 2: Reverse of Screwdriver

The driver has a Quick Change Chuck integrated. When pulling the safety sleeve 344852, the bit (1/4" hex drive) can be easily inserted or removed. When changing bits, allways disconnect the driver from the air supply, otherwise the driver starts when a bit is inserted and may cause injury to an operator. Please use only quality bits.

Please note that an injury is possible:
- If the driver reacts with an unexpected motion or is damaged.
- When the bit is pushed, the screwdriver starts automatically.

1.3 Range- and Exchange of Clutch Spring

The torque range of the Screwdriver is adjustable. Please see a listing for the torque ranges of the color coded clutch springs below.

Torque Range of individual clutch springs:

Part	Wire-Æ	Color	Torque minimum	Torque maximum
353794	2,5 mm	green	1.5 Nm = 13,2 in.lbs.	3,0 Nm = 26,6 in.lbs.
353795	3,2 mm	blue	2,0 Nm = 17,7 in.lbs.	6,0 Nm = 53,1 in.lbs.
353796	4,0 mm	black	5,5 Nm = 48,7 in.lbs.	12,0 Nm = 106,2 in.lbs.

90 PSI (6,3 bar) air pressure.

Change of Clutch Spring (Picture 3)
Prior to change of clutch spring, disconnect driver from air supply.
1. Unscrew clutch bearing. (left-hand thread)
2. Take out clutch complete.
3. Insert torque-adjusting screwdriver 337691 into the half-round bore of the safety ring and turn screwdriver to the right, until the adjusting nut is disassembled.
4. Pull off lock ring.

5. Remove clutch spring, replace with new clutch spring and reassemble clutch in reverse order.
6. Push clutch into the clutch bearing and tighten clutch bearing to the motor housing of the screwdriver. (left hand thread).

Attention:
The claw of the clutch must engage with the claw of the spindle.

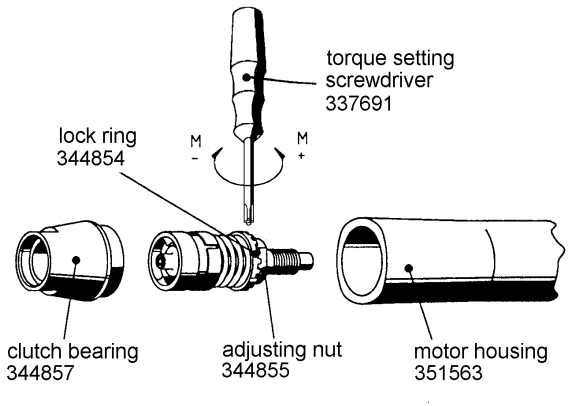

Picture 3: Change of Clutch Spring

1.4 Torque Adjustment

1. Unscrew clutch bearing. (left-hand thread)
2. Take out clutch complete.
3. Insert torque-adjusting screwdriver 337691 into the half-round bore of the safety ring.
4. By turning the screwdriver clockwise, the torque is decreased and when screwdriver is turned counter-clockwise, the torque is increased.
5. Push clutch into the clutch bearing and tighten clutch bearing to the motor housing of the screwdriver. (left hand thread).

Attention:
The claw of the clutch must engage with the claw of the spindle.

2. Spare Parts Listing

See Picture 4, Pages 7 + 8

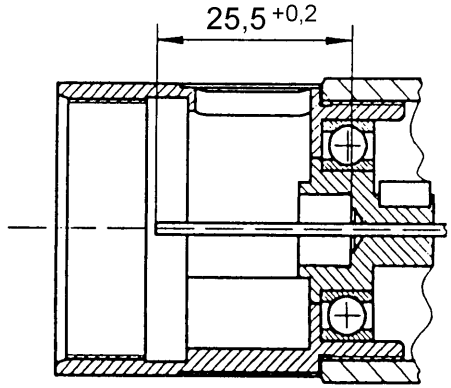

Picture 5: Actual size of Valve Pin

Attention:
When connecting to compressed air supply valve pin may be catapulted out which may cause serious injuries.
When checking the actual size of the valve pin make sure to n o t hold the screwdriver towards yourself nor any other person.

Check the actual size only with compressed air connected!

5. Safety Tips

The tool is not insulated to protect against an electrical power surge.
It is not recommended to use this tool in explosive hazardous environments.

4. Trouble Shooting

Error:	Reason:	Solution:
Screwdriver does not	No air, Shut-Off valve is closed	Open Shut-Off valve
	Clutch is not engaged No push-to-start stroke	Mount clutch correctly Refer to: Range- and exchange of clutch spring
Insufficient Power	Air pressure too low	Minimum air pressure should be 90 PSI for maximum performance
	Restriction in air hose	Remove bends for other restrictions
	Valve Pin too short	Check required length of valve pin according to picture 5. If needed, exchange valve pin.
	Hose I.D. is too small	Use required hose I.D.
	Vanes are worn	Exchange vanes
Driver does not shut-off or ratchets	Air pressure is too low for required torque value	Maintain air pressure of 90 PSI
	Valve Pin is too long	Check length of valve pin, either shorten or replace valve pin

3. Maintenance

3.1 General

Testing and maintenance can be provided by Operator; disassembly and assembly of the Screwdriver should be done by experience repair personnel. Incorrect assembly or disassembly can lead to injury of an operator and to damage of the tool.

We would like to advise, that

- during all maintenance or repair work, the tool must be disconnected from the air supply.
- during all maintenance or repair work, a clean working surface is recommended. Also, it is not recommended to either eat or smoke during repair or maintenance.

3.2 Testing and Maintenance

The tool requires little maintenance. If the following service rules are observed, the tool will have a long life expectancy and will remain in a safe condition.

The tool requires little maintenance. If the following service rules are observed, the tool will have a long life expectancy and will remain in a safe condition.

- Check tool on a regular basis for external damage.
- Check your maintenance until on a regular basis, make sure that sufficient oil is in the lubricator (if lubrication is used) and that the adjustment is correct. We recommend for your lubricator DEPRAGOL, part 790081 E. Oiling: approx. 1 - 2 drops per 1 m^3 air consumption.
- If tool are being used with lubrication, we recommend to have tools tested and cleaned every 12 months (single shift).
- If tools are being used without lubrication, we recommend to have tools tested and cleaned every 6 months (single shift).
- After cleaning, the gearing parts have to be greased prior to re-assembly, preferably with Grease, part 807293.
- After assembly fill 2 – 3 drops of DEPRAGOL into the air inlet nipple.
- Exchange broken or worn bits and parts immediately, for they can cause injury to the Operator.

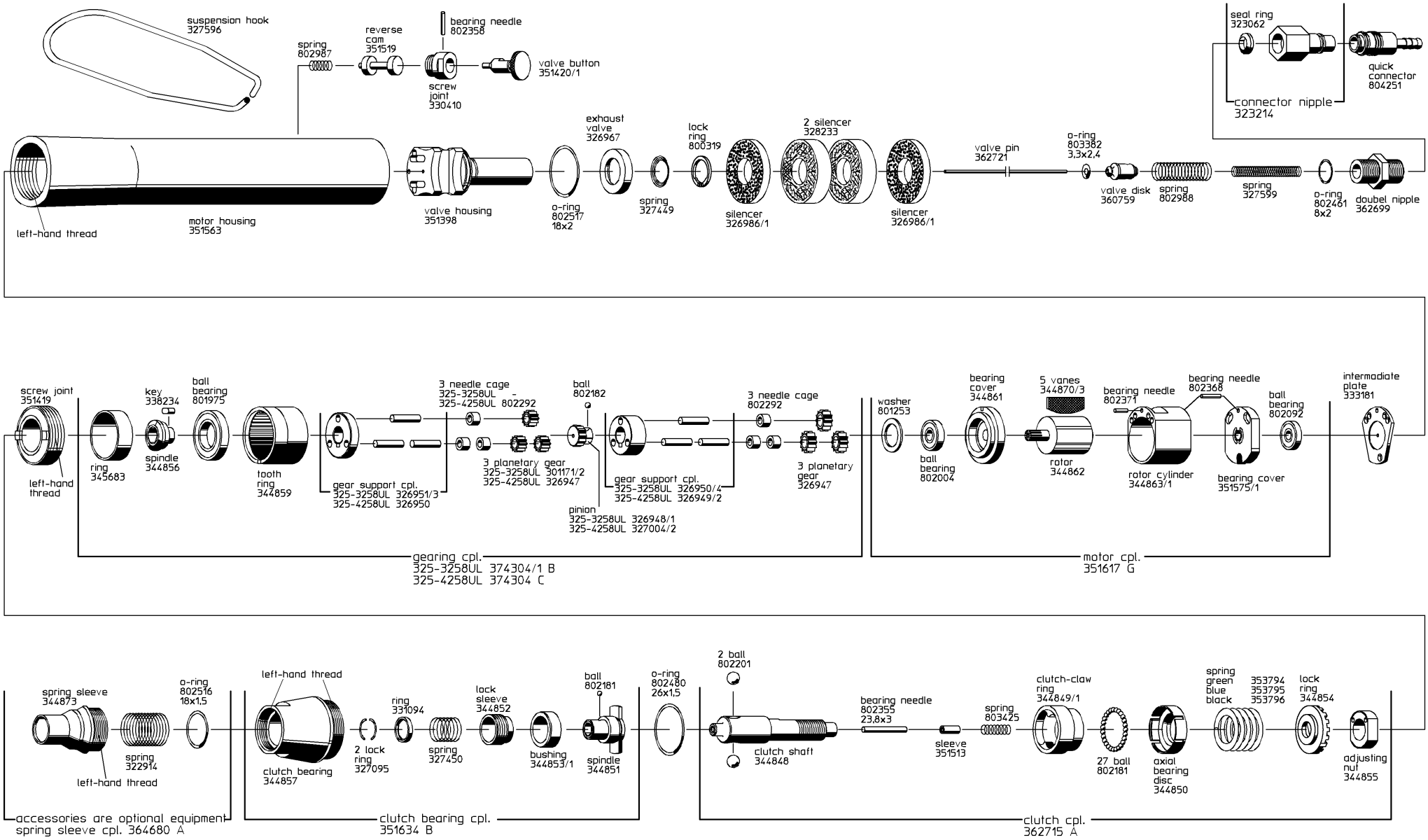

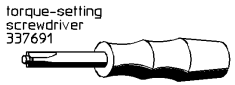

Example spare parts order: 5 off vanes 344870/3

Picture 4: Spare Parts Listing